Shearbolt connectors 10 - 240 mm² (pre-assembled screw)

SC50R50S

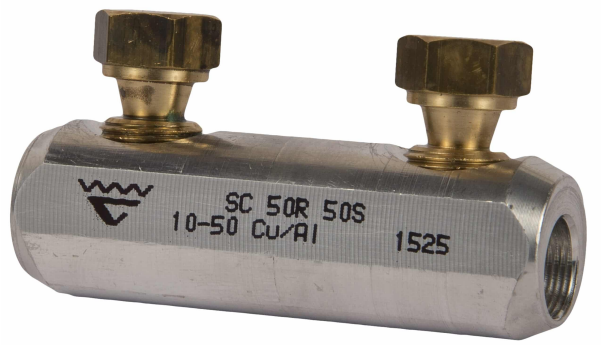

- shearbolt material: brass, for minimum friction
- with partition wall
- pre-threaded shear-off shearbolts for easy handling
- voltage range: 1 -36 kV
- meets the requirements of IEC standard 61238-1:2003

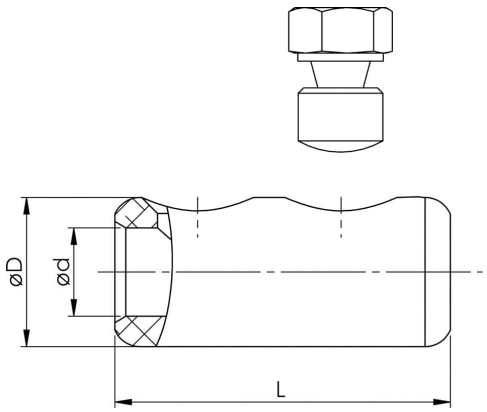

Shearbolt connector 1-36 kV suitable for both Al and Cu class 1 and class 2 cable. Round cable 10-50 mm² (Cu RE 10-35 mm²), sector-shaped cable 16-50 mm². When splicing screen conductors 6-35 mm², filling bit SC95N/PEN is used for splicing the copper screen of the cable.

Item number: **7320-010100**
EAN: **7393487041899**

d (mm): **10.7**
D (mm): **17,3**
L (mm): **62**
s (mm) - strip length: **32**

Max voltage (kV): **1-36**

Screen conductor (mm²): **10-35**
Cable type Round (mm²): **10-50**
Cable type Sector (mm²): **16-50**