Integrated dies 1300-system, B-dies for AlMgSi and Al59

13B32

Integrated die pair for Cu-terminals KRF/KSF 300 mm², hexagonal crimping. No die holders are needed. Used in the V1300 system. 2 crimps.

Item number: **5303-321900**
EAN: **7393487001954**

W (mm): **30.15**
L (mm): **8**
h1 (mm): **12**

Crimp geometries: **Hexagonal**
Number of crimps: **2**
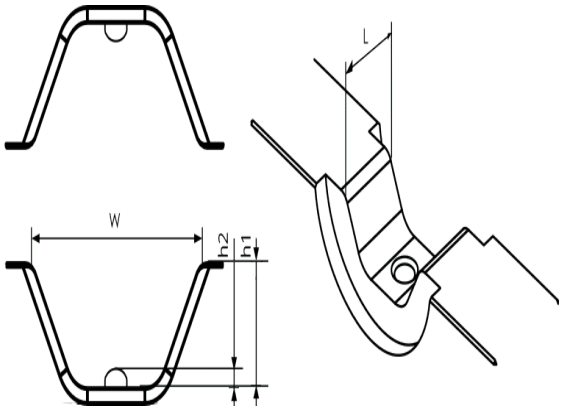
mm² Overhead line: **241**
mm² KR/KS, KRF/KSF: **300**
mm² KRT/KST: **400**
mm² KRD/KSD: **400**